CONSTANT POWER

Model ATS

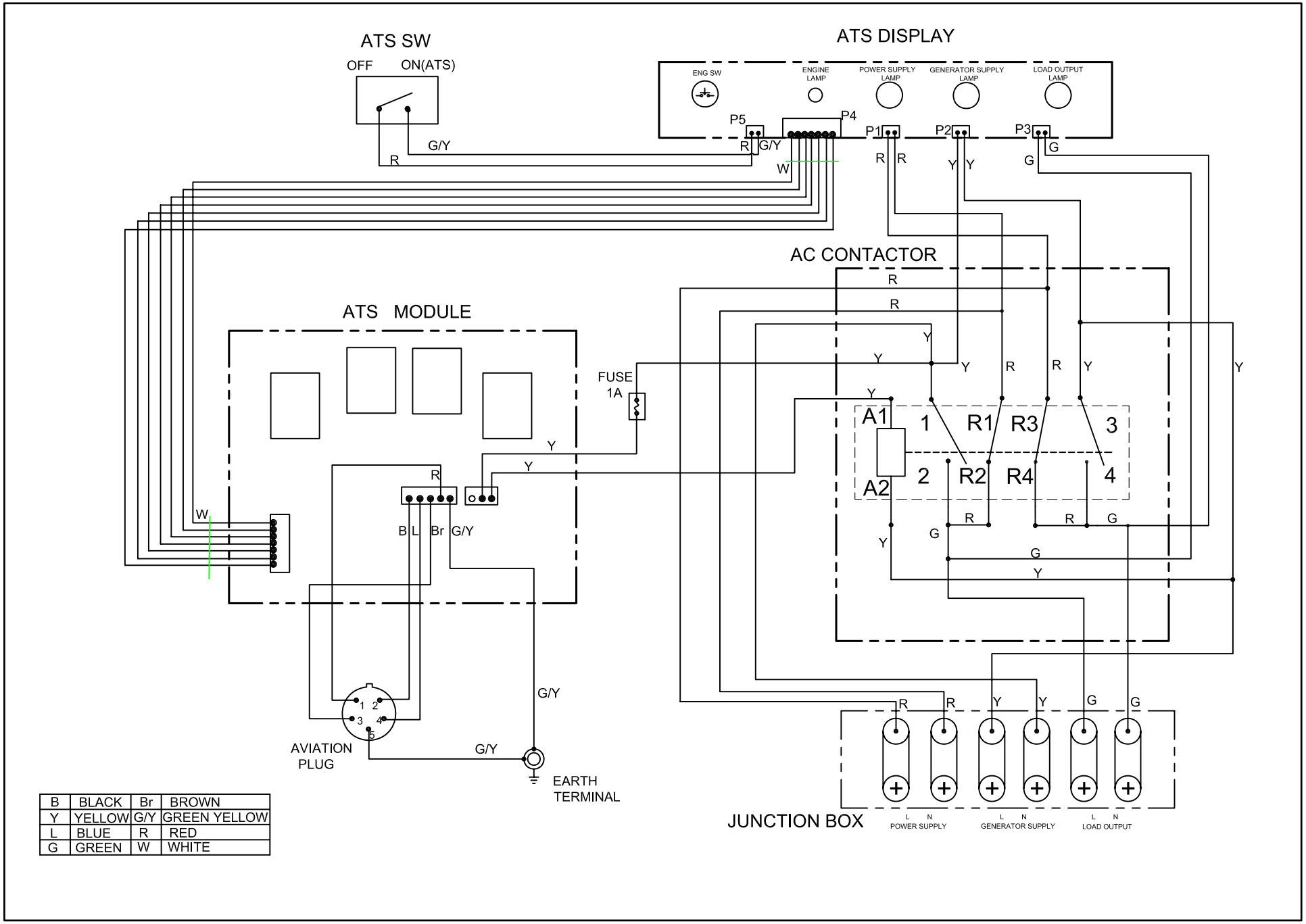

B	BLACK	Br	BROWN
Y	YELLOW	G/Y	GREEN YELLOW
L	BLUE	R	RED
G	GREEN	W	WHITE

DATE:11/19/2010